NYU Langone Health

Laith M Jazrawi, MD
Professor of Orthopedic Surgery
Chief, Division of Sports Medicine
T 646-501-7223

INSTRUCTIONS FOR SURGERY

In order to make your admission and hospital stay smooth and more pleasant, please comply with the following instructions:

☐ If your surgery is on **MONDAY**, please report to:

NYU Langone Orthopedic Hospital
301 East 17th Street
New York, NY 10003

If indicated by your physician, schedule your pre-surgical testing, located at

303 2nd Avenue, 1st Floor Suite 16
New York, NY 10003

☐ If your surgery is on **FRIDAY**, please report to:

NYU Langone Outpatient Surgery Center
339 East 38th Street
New York, NY 10016

If indicated by your physician, please call 212-263-5985 to schedule your pre-surgical testing, located at

240 East 38th St.
New York, NY 10016
Mezzanine Level

***One business day prior to your surgery, hospital staff will contact you to finalize your surgery time.**

A. Bring jogging/warm-up pants, shorts/skirt if having knee surgery.

B. Bring a shirt/blouse that buttons open in front instead of a pullover if having shoulder/elbow surgery.

C. If you own crutches, bring them with you, if having knee, ankle or hip surgery.

D. Bring all medications or a list of current medications you are taking with you. Also bring a list of any allergies.

E. Blood pressure medication should be taken as usual with a sip of water the morning of surgery. **DO NOT** take a diuretic or fluid pill. Seizure medications may be taken before surgery.

F. **DO NOT** take oral diabetes medications (pills) the night before or the day of surgery. If you are on insulin, **DO NOT** use insulin the morning of surgery unless you are a "problem diabetic" in which case you need to consult your physician regarding the proper insulin dose for you to use prior to surgery.

NYU Langone Health

Laith M Jazrawi, MD
Professor of Orthopedic Surgery
Chief, Division of Sports Medicine
T 646-501-7223

G. Please **DO NOT** wear makeup or nail polish the day of surgery. You will need to remove contact lens (including extended wear), denture, or bridges prior to surgery. Please bring your own containers for storage.

H. Leave all jewelry and valuables at home. The hospital will not take responsibility for lost or missing items.

I. You need to report any skin irritation, fever, cold, etc., to Dr. Jazrawi.

J. You will need to bring your insurance card/information with you.

K. DO NOT eat, drink (including water), chew gum, candy, smoke cigarettes, cigars, use smokeless tobacco, etc., after midnight the night before surgery or the morning of your surgery. The only exception is a sip of water to take necessary medications the morning of surgery.

L. You must arrange someone to drive you home when ready to leave the hospital. You will not be allowed to drive yourself home after surgery. We can assist you if you need transportation to the airport or hotel, however, you need to let us know in advance (if possible) so we can make the arrangement.

M. NOTE: DO NOT take any aspirin, aspirin products, anti-inflammatories, Coumadin or Plavix at least 5 days prior to surgery. You are allowed to take Celebrex up to your day of surgery. If your medical doctor or cardiologist has you on any of the above medications. Please check with him/her before discontinuing the medication. You may also take Tylenol or Extra-Strength Tylenol if needed.

Nonsteroidal Anti-Inflammatory (Arthritis) Medications:

Some of the most common names for frequently used NSAID's include: Motrin, Indocin, Nalfon, Naprosyn, Naprelan, Arthrotec, Tolectin, Feledene, Voltaren, Clinoril, Dolobid, Lodine, Relafen, Daypro, Advil, Aleve, Ibuprofen.

Your first follow up appointment is usually scheduled for approximately 2 weeks after your surgery at the 333 East 38th street office. The date and time of your follow-up is _____.

If you cannot make this appointment or need to change the time, please contact the office.

If you have any questions regarding your surgery, please contact the office at 646-501-7223 option 4, option 2 or via the internet at www.newyorkortho.com

NYU Langone Health

Laith M Jazrawi, MD
Professor of Orthopedic Surgery
Chief, Division of Sports Medicine
T 646-501-7223

Home Supplies For Your Surgery
Laith M Jazrawi, MD

Open Surgery

A. **Open knee surgery** (ACL reconstructions, ALL (Anterolateral ligament) reconstructions, Autologous Chondrocyte Implantation, PCL reconstructions, High tibial osteotomy, Distal femoral osteotomy, Posterolateral corner reconstruction, MCL reconstruction, OATS (osteochondral autograft), Osteochondral allograft,)
    a. You will need 4x4 (or similar size) waterproof bandages for fourteen days. **Bandage changes for open knee surgery done post-op day #3.**
B. **Open shoulder surgery** , (Biceps Tenodeis, Latarjet, Open capsulorrhaphy, Glenoid reconstruction using Distal tibial allograft):
    a. You will need 4x4 (or similar size) waterproof bandages for fourteen days. Also, a box of **Bandage changes for open shoulder surgery are done post-op day #3.**
C. **Open Ankle Surgery** (Achilles Tendon Repair, Os Trigonum Excision, Ankle OCD, Modified Brostrom-Gould Procedure, Peroneus Longus/Brevis Repair)- You do not have to worry about dressing changes as your leg will be in splint/cast for the first two weeks
D. **Open Elbow surgery** (Distal Biceps Repair, LCL Reconstruction, Radial Head or Capitellum ORIF, Radial Head Replacement/Resection, Triceps Repair, UCL Reconstruction – Tommy John Surgery)- You do not have to worry about dressing changes as your arm will be in splint/cast for the first two weeks. **For Tennis Elbow surgery (lateral epicondylitis) and Golfer's Elbow Surgery (medial epicondylitis), dressing changes are are started on post-op day #3**. You will need 4x4 (or similar size) waterproof bandages for fourteen days.
E. **Hamstring repair You will have a special dressing placed on at the time of surgery that will be kept on for the first 2 weeks after surgery.** You will then need 4x4 (or similar size) Tegaderm or Telfa waterproof dressings. Also, a box of 4" by 4" gauze sponges if there is bleeding at the incision site.

Arthroscopic Surgery

A. For Arthroscopic shoulder, elbow, knee, or ankle surgery:
    a. Regular adhesive bandages ("Band-aids") can be used for arthroscopic portals x 2 weeks.
    b. **If biceps tenodesis was performed, use 4x4 (or similar size) waterproof bandages on wounds.**
    c. **In general, dressing changes for arthroscopy are done on post operative day 3**

NYU Langone Health

Laith M Jazrawi, MD
Professor of Orthopedic Surgery
Chief, Division of Sports Medicine
T 646-501-7223

Post-Operative Medication Administration

Knee Arthroscopy

- Pain- Motrin 800mg. 1 tab three times daily, as needed
- Adjunctive pain: Percocet (Oxycodone/Acetaminophen) 5/325 (5 tabs); One tab every 6 hours as needed for adjunctive pain*

Meniscal Repair, Meniscal Root Repair

- Pain- Percocet (Oxycodone/Acetaminophen)10/325; One tab every 6 hours as needed*
- Constipation – Docusate (Colace) 100mg; 1 tab twice daily as needed.
- DVT prophylaxis- Aspirin 81mg; 2 tabs daily x 14 days
- ****** Aspirin starts post-operative day #1

Knee Ligament Reconstruction

- Pain- Percocet (Oxycodone/Acetaminophen) 10/325; One tab every 6 hours as needed*
- Antibiotic – Keflex 500mg; One tab 4 times daily x 4 days
    - Keflex allergy – Clindamycin 300mg; One tab twice daily x 7days.
- Constipation – Docusate (Colace) 100mg; 1 tab twice daily as needed (Max 3 tabs)
- DVT prophylaxis- Aspirin 81mg; 2 tabs daily x 28 days
- *****Antibiotics and Aspirin starts post-operative day #1

Non-weight bearing Lower Extremity Surgery (Distal Femoral Osteotomy, High Tibial Osteotomy, Tibial Tubercle Osteotomy, Cartilage Transplant)

- Antibiotic – Keflex 500mg; One tab 4 times daily x 4 days
    - Keflex allergy – Clindamycin 300mg; One tab twice daily x 7days.
- Pain- Percocet (Oxycodone/Acetaminophen) 10/325; One tab every 6 hours as needed*
- Constipation – Docusate (Colace) 100mg; 1 tab twice daily as needed (Max 3 tabs)
- DVT prophylaxis- Aspirin 81mg; 2 tabs daily x 28 days
- ******Antibiotics and Aspirin starts post-operative day #1

Shoulder/Elbow Surgery

- Antibiotic – Keflex 500mg; One tab 4 times daily x 4 days
    - Keflex allergy – Clindamycin 300mg; One tab twice daily x 7days.
- Pain- Percocet (Oxycodone/Acetaminophen)10/325; One tab every 6 hours as needed*
- Constipation – Docusate (Colace) 100mg; 1 tab twice daily as needed.

NYU Langone Health

Laith M Jazrawi, MD
Professor of Orthopedic Surgery
Chief, Division of Sports Medicine
T 646-501-7223

Ankle fracture surgery & Achilles Tendon Surgery

- Antibiotic – Keflex 500mg; One tab 4 times daily x 4 days
    - Keflex allergy – Clindamycin 300mg; One tab twice daily x 7days.
- Pain- Percocet (Oxycodone/Acetaminophen)10/325; One tab every 6 hours as needed*
- Constipation – Docusate (Colace) 100mg; 1 tab twice daily as needed.
- DVT Prophylaxis - Aspirin 81mg; 2 tabs daily x 28 days
- ****Antibiotics and Aspirin starts post-operative day #1

Ankle arthroscopy +/- Microfracture

- Pain- Percocet (Oxycodone/Acetaminophen) 10/325; One tab every 6 hours as needed*
- DVT Prophylaxis - Aspirin 81mg; 2 tabs daily x 14 days
- ****Aspirin starts post-operative day #1

Hamstring repair

- Antibiotic – Keflex 500mg; One tab 4 times daily x 4 days
    - Keflex allergy – Clindamycin 300mg; One tab twice daily x 7days.
- Pain- Percocet (Oxycodone/Acetaminophen)10/325; One tab every 6 hours as needed*
- Constipation – Docusate (Colace) 100mg; 1 tab twice daily as needed.
- DVT Prophylaxis - Aspirin 81mg; 2 tabs daily x 28 days
- ****Antibiotics and Aspirin starts post-operative day #1

*** No refills of narcotic pain medication will be given**. You must transition to over the counter Aleve or Motrin after your initial course of narcotic pain medication is completed. If you have any stomach issues you may transition to Extra Strength Tylenol instead.

***** HIGH RISK DVT Patients – patients on oral contraceptives, smokers, or history of previous DVT or embolus**

- Will receive
    - Xeralto (Rivaroxaban) 10mg; 1 tab daily x 14 days
    - Followed by aspirin 81mg; 2 tabs daily x 14 days

NYU Langone Health

Laith M Jazrawi, MD
Professor of Orthopedic Surgery
Chief, Division of Sports Medicine
T 646-501-7223

Post-Operative Instructions
Quad/Patellar Tendon Repair

Day of surgery

A. Diet as tolerated
B. Icing is important for the first 5-7 days post-op. While the post-op dressing is in place, icing should be done continuously. Once the dressing is removed on the third post-operative day, ice is applied for 20-minute periods 3-4 times per day. Care must be taken with icing to avoid frostbite. Alternatively, Cryocuff or Game-ready ice cuff can be used as per instructions.
C. Pain medication as needed every four-six hours (refer to pain medication sheet)
D. Make sure you have a physical therapy post-op appointment scheduled to begin ~2 weeks after your surgery, which will be after your first postoperative visit.

Video instructions for your brace can be found at https://www.youtube.com/watch?v=jyRZkSyFBOQ

First Post-Operative Day

A. Continue icing
B. Pain medication as needed.

Second Post-Operative Day Until Return Visit

A. Continue icing
B. Unless otherwise noted, weight-bearing is toe touch only with crutches for the first week after surgery. After 1 week, you can bear as much weight on the affected leg as you can tolerate.
C. Call our office @ 646-501-7223 option 4, option 2 to confirm your first postoperative visit, which is usually about 1-2 weeks after surgery if you have not been given a time. If you are experiencing any problems, please call our office or contact us via the internet at www.newyorkortho.com.

Third Post-Operative Day

A. You may shower this evening. You MUST keep the extremity dry while showering. After showering, remove surgical bandage and apply fresh 4x4 surgical sponges/gauze to the incision and wrap with an ACE bandage. You will need to follow this routine for 2 weeks after surgery.

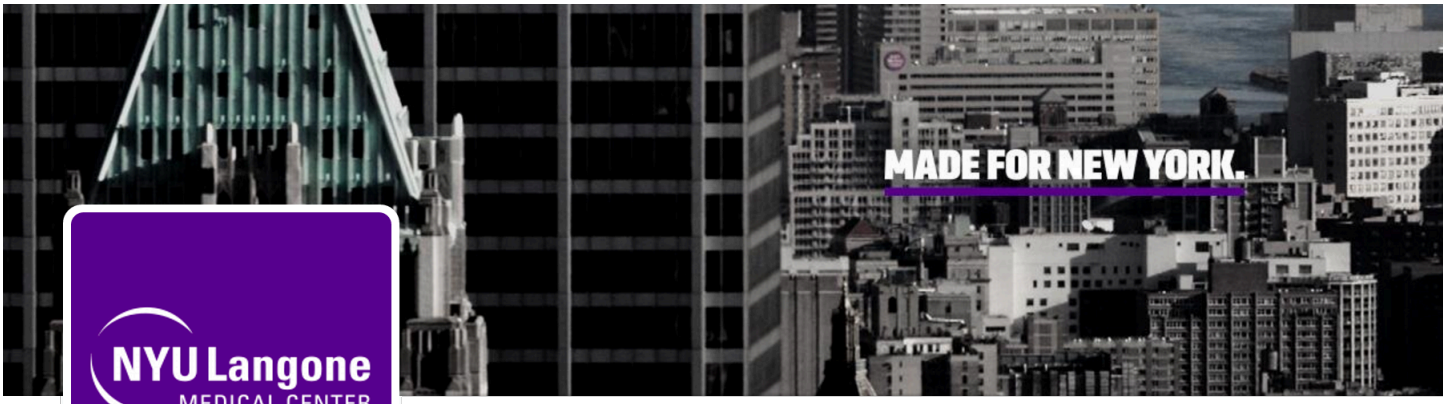

NYU Langone MEDICAL CENTER

Dr. Laith M. Jazrawi
Chief, Division of Sports Medicine
Associate Professor Department of Orthopaedic Surgery

Rehabilitation Protocol: Quad/Patellar Tendon Repair

The knee consists of four bones that form three joints. The femur is the large bone in the thigh and attaches by ligaments and a capsule to the tibia, the large bone below the knee commonly referred to as the shin bone. Next to the tibia is the fibula, which runs parallel to the tibia on the outside of the leg. The patella, commonly called the knee cap, is embedded in the quadriceps and patellar tendon which articulates with the front of the femur, forming the patellofemoral joint (Figure 1). The patella acts as a pulley to increase the amount of force that the quadriceps muscle can generate and helps direct the force in the desired upward direction.[1]

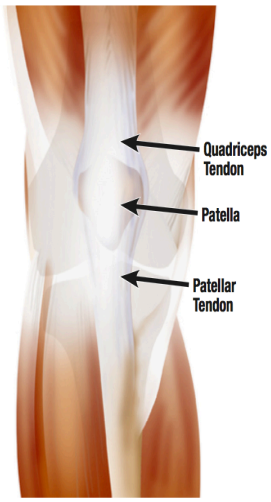

Figure 1. *Front view of normal knee anatomy, showing the quadriceps tendon above the patella (knee cap) and patellar tendon below the patella.*

Complete ruptures or partial tears of the patellar tendon or quadriceps tendon can result from landing from a jump, a fall causing excessive knee flexion or other heavy loading of the tendon. Quadriceps tendon ruptures usually occur in people older than 40 years of age. One review article cited 88% of patients with quadriceps tendon rupture were 40 and older. In contrast, most patellar tendon ruptures occur in patients younger than 40. One study reported the average age for patellar tendon rupture to be 28. In both cases it is more likely to occur in males than females. Chronic tendinopathy from repetitive sporting activity; chronic diseases (i.e. renal failure, hyperparathyroidism, diabetes) that compromise blood supply to the tendon; or chronic steroid use may weaken the quadriceps tendon or patellar tendon and make it more susceptible to rupture. The nature and size of the tear, the age of the patient and the activity level of the patient are all important factors in determining the safest and most effective treatment. Good outcomes can be obtained with non-surgical treatment for many small, partial tears. This may involve a short period of immobilization, followed by supervised rehabilitation with a physical therapist or athletic trainer.

Surgical repair is usually necessary to obtain the optimal outcome for large, partial tears and complete ruptures. Most often the torn tendon is re-attached to the knee cap by passing the tendon through drill holes in the knee cap for fixation. In some cases graft tissue may be added to the repair to obtain the desired length of the repaired tendon. In rare cases an “end to end” tendon repair may be done. This technique is used when the tendon is ruptured in the mid-portion as opposed to near the boney insertion. In either operation, often times a “relaxing suture” is placed to provide extra protection to the repaired tendon by taking some tension off the repair during the initial healing phase (Figure 2).

The outcome from surgical repair is dependent on several variables. People who have their surgery performed early after the injury generally do better than people who have delayed surgery.

Most people should be able to return to their previous occupation and level of daily activity. Return to sports will be dependent on the sport to which the individual is returning, age, severity of the injury and return of strength.

Supervised and structured post-operative rehabilitation is an integral component to obtaining an optimal outcome. Research from our institution has shown that early rehabilitation and mobilization are safe and effective for maximizing outcome.[3]

Our rehabilitation guidelines are presented in a criterion based progression program. General time frames are given for reference to the average, but individual patients will progress at different rates depending on their age, associated injuries, pre-injury health status, rehabilitation compliance, tissue quality, and injury severity. Specific time frames, restrictions and precautions may also be given to protect healing tissues, and the surgical repair/reconstruction.

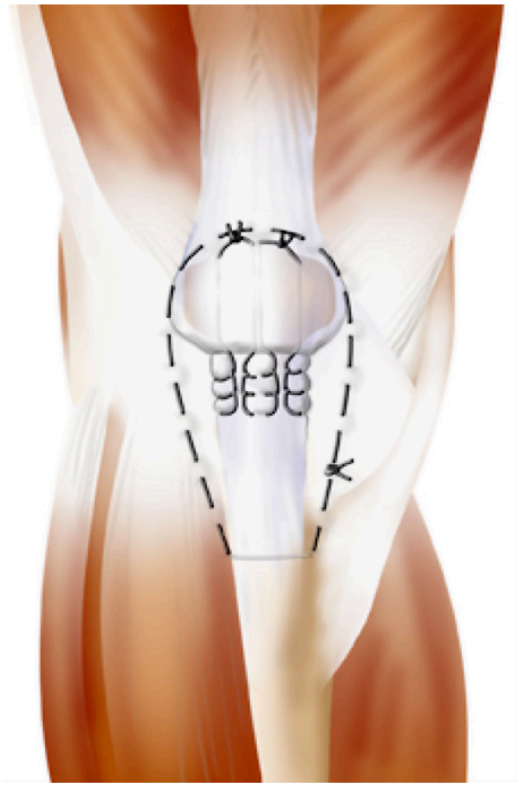

Figure 2. *Front view of knee after patellar tendon repair. The primary sutures repair the torn tendon and the relaxing suture encompasses the repair and goes around the patella, providing initial protection to the repaired portion of the tendon.*

Rehabilitation Protocol: Quad/Patellar Tendon Repair

POST-OPERATIVE

Appointments	○ First PT visit 4 weeks after surgery
Goals	○ Passive or active-assistive ROM for full extension and 0-30° flexion per MD discretion ○ TTWB crutch gait for 6 weeks with brace locked at 0° ○ Brace locked at 0° for all activities except therapeutic exercise
Precautions	○ Water precautions
Therapeutic Exercises	○ AAROM for flexion (see above) and full extension ○ Isometric quad, ham, adductor and abductor ○ Ankle theraband exercises
Other Suggestions	○ Heat/Ice before and after PT sessions

Weeks 2-6

Appointments	○ PT as necessary to meet goals
Goals	○ Passive or active-assistive ROM, adding 15° flexion each week with a goal of 90° at 6 weeks ○ Advance beyond 90° after 6 weeks ○ Remove suture from incision and re-apply steri-strips at 2 weeks ○ TTWB crutch gait with brace locked at 0°
Therapeutic Exercises	○ As above ○ Upper extremity exercise is okay

Weeks 6-12

Appointments	○ PT as necessary to meet goals
Goals	○ D/C brace at 6 weeks ○ PWB with crutches ○ Progress to FWB gait as tolerated
Therapeutic Exercises	○ AAROM and gentle stretching ○ Lower extremity PRE's with low weight/high repetition ○ Stationary bicycle ○ Impact activities per MD discretion

References

1. Neuman DA. *Kinesiology of the Musculoskeletal System: Foundations for Physical Rehabilitation.* 1st ed. St. Louis, MO: Mosby; 2002.
2. http://orthoinfo.aaos.org
3. West JL, Keene JS, Kaplan LD. Early motion after quadriceps and patellar tendon repairs: outcomes with single-suture augmentation. *Am J Sports Med.* 2008 Feb;36(2):316-23. Epub 2007. Oct 11.

NYU Langone Health

Laith M Jazrawi, MD
Professor of Orthopedic Surgery
Chief, Division of Sports Medicine
T 646-501-7223

Rehabilitation Protocol: Quad/Patellar Tendon Repair

Name: _____ **Date:** _____

Diagnosis: _____ **Date of Surgery:** _____

☐ **Week 0-2**

- First PT visit 2 weeks post surgery
- Passive or active-assistive ROM for full extension and 0-30° flexion per MD discretion
- TTWB crutch gait for 6 weeks with brace locked at 0°
- Brace locked at 0° for all activities except therapeutic exercise
- **Therapeutic exercise:**
  - A.A.ROM for flexion (see above) and full extension
  - Isometric quad, ham, adductor and abductor
  - Ankle theraband exercises
- Water precautions

☐ **Week 2-6**

- PT as necessary to meet goals
- Passive or active-assistive ROM. Add 15° flexion each week with a goal of 90° at 6 weeks. Advance beyond 90° after 6 weeks.
- Remove suture from incision and re-apply steri-strips at 2 weeks
- TTWB crutch gait with brace locked at 0°
- **Therapeutic exercise:**
  - -As above
  - -Upper extremity exercise okay

☐ **Week 6-12**

- PT as necessary to meet goals
- Weeks 6-8: full weight-bearing as tolerated in unlocked hinged knee brace
- May discontinue brace at week 8
- **Therapeutic exercise:**
  - A.A.ROM and gentle stretching
  - Lower extremity PRE's with low weight / high repetition
  - Stationary bicycle
  - Impact activities per MD

Protocol Modifications:

Comments:

Frequency: _____ **times per week** **Duration:** _____ **weeks**

Signature: _____ **Date:** _____

NYU Langone Health

Laith M Jazrawi, MD
Professor of Orthopedic Surgery
Chief, Division of Sports Medicine
T 646-501-7223

PHYSICAL THERAPY LOCATIONS

Please schedule your post-operative physical therapy appointments BEFORE your surgery

Manhattan Sports and Manual Physical Therapy
10 East 33rd Street, 2nd Floor
New York, NY 10016
(646) 487-2495
www.msmpt.com

NYU Langone Orthopedic Center PT
333 E 38th St, 5th Floor
New York, NY 10016
(646) 501-7077

Other Locations:

BROOKLYN				
R.P.T. Physical Therapy	335 Court Street	Cobble Hill	11231	(718) 855-1543
One on One PT	2133 Ralph Ave	Flatlands	11234	(718) 451-1400
One on One PT	17 Eastern Parkway	Prospect Heights	11238	(718) 623-2500
One on One PT	9920 4th Ave	Bay Ridge	11209	(718) 238-9873
One on One PT	1390 Pennsylvania Ave	Canarsie	11239	(718) 642-1100
One on One PT	1715 Avenue T	Sheepshead Bay	11229	(718) 336-8206

MANHATTAN-DOWNTOWN				
Health SOS	594 Broadway	New York	10012	(212) 343-1500
Occupational & Industrial Orthopaedic Center	63 Downing Street	New York	10014	(212) 255-6690
Promobility	401 Broadway	New York	10013	(646) 666-7122

MANHATTAN –EAST SIDE				
Harkness Center for Dance (PT Service)	614 Second Ave	New York	10003	(212) 598-6054
RUSK at the Men's Center	555 Madison Ave	New York	10022	(646) 754-2000
RUSK Physical Therapy	240 E. 38th Street	New York	10016	(212) 263-6033
STAR Physical Therapy	160 E. 56th Street	New York	10022	(212) 355-7827

NYU Langone Health

Laith M Jazrawi, MD
Professor of Orthopedic Surgery
Chief, Division of Sports Medicine
T 646-501-7223

Therapeutic Inspirations	144 E. 44th St	New York	10017	(212) 490-3800

MANHATTAN UPPER EAST SIDE				
Health SOS	139 E. 57th Street	New York	10022	(212) 753-4767
Premier PT	170 E. 77th Street	New York	10021	(212) 249-5332
Rusk PT at Women 's Health Center	207 E. 84th Street	New York	10028	(646) 754-3300
SPEAR PT	120 E. 56th Street	New York	10022	(212) 759-2211
Sports PT of NY	1400 York Ave	New York	10021	(212) 988-9057

MANHATTAN UPPER WEST SIDE				
Premier PT	162 W. 72nd Street	New York	10023	(212) 362-3595
Sports PT of NY	2465 Broadway	New York	10025	(212) 877-2525

MANHATTAN WEST SIDE				
Sports Medicine at Chelsea	22 West 21st Street Suite 400	New York	10010	(646) 582-2056
Chelsea Physical Therapy & Rehabilitation	119 W. 23rd Street	New York	10011	(212) 675-3447
SPEAR Physical Therapy	36 W. 44th Street	New York	10036	(212) 759-2280

QUEENS				
Ergo Physical Therapy P.C.	107-40 Queens Blvd	Forest Hills	11375	(718) 261-3100
Susan Schiliro, PT (Hand & Upper Extremity only)	99-32 66th Road	Rego Park	11374	(718) 544-1937

STATEN ISLAND				
One on One PT	31 New Dorp Lane 1st, Floor	Staten Island	10306	(718) 979-4466
One on One PT	33 Richmond Hill Rd	Staten Island	10314	(718) 982-6340

LONG ISLAND				
Health SOS	375 Deer Park Ave	Babylon	11702	(631) 321-6303

NYU Langone Health

Laith M Jazrawi, MD
Professor of Orthopedic Surgery
Chief, Division of Sports Medicine
T 646-501-7223

Hand in Hand Rehabilitation (Hand & Upper Extremity only)	346 Westbury Ave	Carle Place	11514	(516) 333-1481
Home PT Solutions	111 W. Old Country Rd.	Hicksville	11801	(516) 433-4570
Bi-County Physical Therapy & Rehabilitation	270-03 Hillside Ave	New Hyde Park	11040	(718) 831 - 1900
Bi-County Physical Therapy & Rehabilitation	397 Willis Ave	Williston Park	11596	(516) 739-5503

WESTCHESTER				
Health SOS	1015 Saw Mill River	Ardsley	10502	(914) 478-8780
Premier PT	223 Katonah Ave	Katonah	10536	(914) 232-1480
PRO Sports PT of Westchester	2 Overhill Road	Scarsdale	10583	(914) 723-6987
Westchester Sports Physical Therapy, PC	672 White Plains Road	Scarsdale	10583	(914) 722-2400
Rye Physical Therapy and Rehabilitation	411 Theodore Fremd Ave	Rye	10580	(914) 921-6061
Rye Physical Therapy and Rehabilitation	15 North Broadway; Suite K	White Plains	10601	(914) 686-3132

CONNECTICUT				
Premier PT	36 Old Kings Hwy S	Darien	06820	(203) 202-9889

NEW JERSEY				
Jersey Central Physical Therapy & Fitness	21 47 Route 27	Edison	08817	(732) 777-9733
Jag PT	34 Mountain Blvd	Warren	07059	(908) 222-0515
Jag PT	622 Eagle Rock Ave	West Orange	07052	(973) 669-0078

T Scope® Premier

Post-Op Brace Fitting Instructions

Anleitung zum Anlegen der Schiene nach der Operation
Istruzioni per l'adattamento post-operatorio del tutore
Mise en place de l'orthèse postopératoire
Instrucciones de colocación de la rodillera postoperativa

breg.com/TS

Breg, Inc.
2885 Loker Ave. East
Carlsbad, CA 92010 U.S.A.
P: 800-321-0607
F: 800-329-2734
www.breg.com

AW-1.00495 REV A 0113

CE

EC	REP

E/U authorized representative
MDSS GmbH
Schiffgraben 41
D-30175 Hannover
Germany

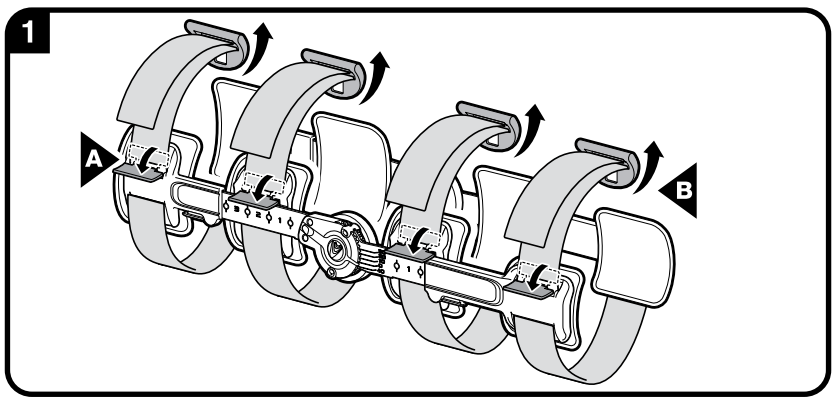

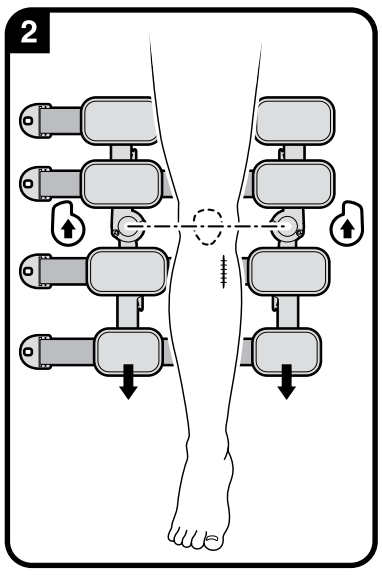

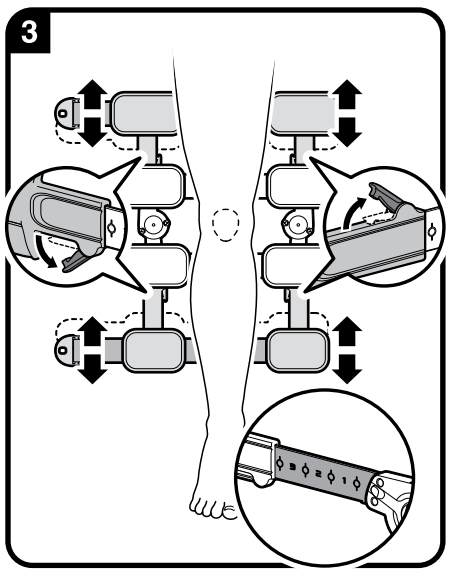

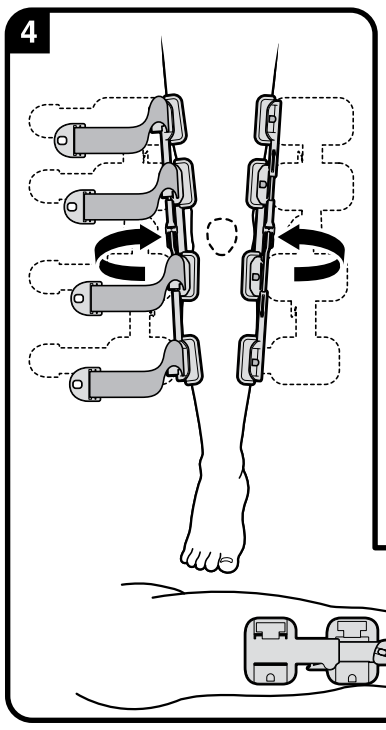

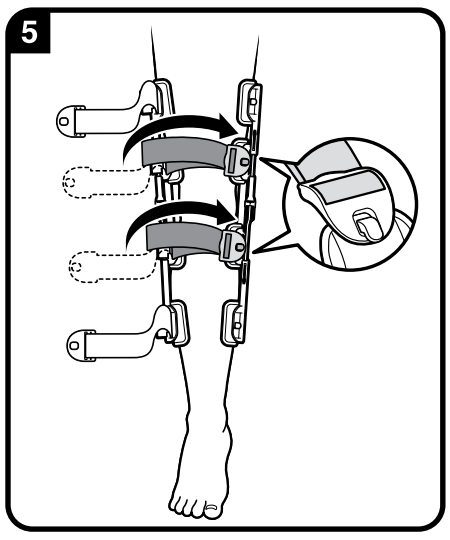

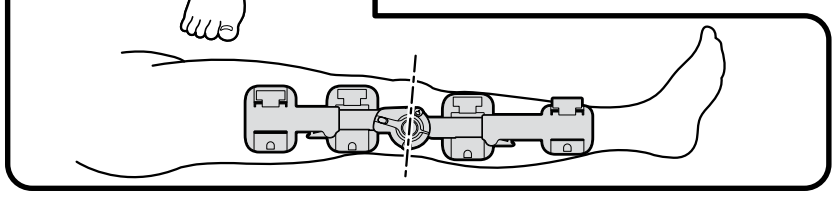

W A R N I N G S

WARNING: CAREFULLY READ USE/CARE INSTRUCTIONS AND WARNINGS PRIOR TO USE.
WARNING: DO NOT REMOVE T SCOPE BRACE UNLESS INSTRUCTED BY YOUR MEDICAL TREATMENT PROFESSIONAL. DO NOT CHANGE RANGE OF MOTION HINGE SETTINGS WITHOUT SUPERVISION BY A MEDICAL PROFESSIONAL.
WARNING: THIS DEVICE WILL NOT PREVENT OR REDUCE ALL INJURIES. PROPER REHABILITATION AND ACTIVITY MODIFICATION ARE ALSO AN ESSENTIAL PART OF A SAFE TREATMENT PROGRAM. CONSULT WITH YOUR MEDICAL TREATMENT PROFESSIONAL REGARDING SAFE AND APPROPRIATE ACTIVITY LEVEL WHILE WEARING THIS DEVICE.
WARNING: IF YOU EXPERIENCE INCREASED PAIN, SWELLING, SKIN IRRITATION, OR ANY ADVERSE REACTIONS WHILE USING THIS PRODUCT, IMMEDIATELY CONSULT YOUR MEDICAL PROFESSIONAL.
WARNING: THE HINGE ON THIS BRACE IS DESIGNED TO LIMIT AND/OR CONTROL RANGE OF MOTION. IT IS NOT DESIGNED TO STABILIZE YOUR KNEE WHEN YOU ARE WEIGHT-BEARING OR TAKE THE PLACE OF A WALKING AID. FOLLOW YOUR PHYSICIAN'S ADVICE REGARDING WEIGHT-BEARING AND ALWAYS USE A PROPER ASSISTANCE DEVICE, SUCH AS CRUTCHES OR A WALKER.
CAUTION: FEDERAL LAW RESTRICTS THIS DEVICE TO SALE BY OR ON THE ORDER OF A LICENSED HEALTH CARE PRACTITIONER.
CAUTION: FOR SINGLE PATIENT USE ONLY.

W A R N U N G S

WARNUNG: VOR GEBRAUCH BITTE SORGFÄLTIG ALLE ANWEISUNGEN ZUM GEBRAUCH UND ZUR PFLEGE SOWIE DIE WARNUNGEN DURCHLESEN.
WARNUNG: DIE T SCOPE-SCHIENE NUR AUF ÄRZTLICHE ANWEISUNG ENTFERNEN. DIE BEWEGUNGSSPIELRAUMEINSTELLUNG DES SCHARNIERS NUR UNTER AUFSICHT EINER MEDIZINISCHEN FACHKRAFT ÄNDERN.
WARNUNG: DIESES GERÄT KANN NICHT ALLE VERLETZUNGEN VERHINDERN ODER LINDERN. ANGEMESSENE REHABILITATION UND MODIFIZIERUNG DER AKTIVITÄTEN SIND EIN UNERLÄSSLICHER BESTANDTEIL EINES SICHEREN BEHANDLUNGSPROGRAMMS. SPRECHEN SIE MIT IHREM MEDIZINISCHEN PFLEGEPERSONAL ÜBER DEN GEFAHRLOSEN UND ANGEMESSENEN AKTIVITÄTSGRAD WÄHREND DES TRAGENS DIESER SCHIENE.
WARNUNG: WENN BEI DER VERWENDUNG ERHÖHTE SCHMERZEN, SCHWELLUNGEN, HAUTREIZUNG ODER ANDERE NEBENWIRKUNGEN AUFTRETEN, KONSULTIEREN SIE BITTE SOFORT IHREN ARZT.
WARNUNG: DAS SCHARNIER AN DIESER SCHIENE IST ZUR EINSCHRÄNKUNG BZW. KONTROLLE DES BEWEGUNGSSPIELRAUMS KONZIPIERT. ES IST NICHT DAFÜR VORGESEHEN, DAS KNIE BEI GEWICHTSBELASTUNG ZU STABILISIEREN UND DIENT NICHT ALS ERSATZ FÜR EINE GEHHILFE. BEACHTEN SIE DIE ÄRZTLICHEN ANWEISUNGEN IM HINBLICK AUF BELASTUNG UND VERWENDEN SIE STETS EINE PASSENDE GEHHILFE WIE KRÜCKEN ODER EINEN WALKER.
ACHTUNG: LAUT GESETZ DARF DIESES PRODUKT NUR VON ZUGELASSENEM MEDIZINISCHEM FACHPERSONAL ODER AUF DESSEN ANWEISUNG VERKAUFT WERDEN.
ACHTUNG: NUR ZUM GEBRAUCH FÜR EINEN EINZELNEN PATIENTEN VORGESEHEN.

A V V E R T E N Z E

AVVERTENZA - PRIMA DI UTILIZZARE IL DISPOSITIVO, LEGGERE ATTENTAMENTE LE ISTRUZIONI E LE AVVERTENZE RELATIVE ALL'USO E ALLA MANUTENZIONE.
AVVERTENZA - NON TOGLIERSI IL TUTORE T SCOPE SE NON DIETRO ORDINE DELL'OPERATORE SANITARIO. NON CAMBIARE IL RAGGIO DI MOVIMENTO DELLE CERNIERE SENZA LA SUPERVISIONE DI UN OPERATORE SANITARIO.
AVVERTENZA - QUESTO DISPOSITIVO NON PREVIENE NÉ RIDUCE ALCUNA LESIONE. PARTE ESSENZIALE DI UN PROGRAMMA TERAPEUTICO COMPLETO SONO ANCHE UNA RIABILITAZIONE ADEGUATA E LA MODIFICA DELLE ATTIVITÀ SVOLTE. CONSULTARE L'OPERATORE SANITARIO SUL LIVELLO DI ATTIVITÀ SICURO E APPROPRIATO MENTRE SI INDOSSA QUESTO DISPOSITIVO.
AVVERTENZA - SE DURANTE L'USO SI ACCUSANO AUMENTO DI DOLORE, GONFIORE, IRRITAZIONE CUTANEA O QUALUNQUE ALTRA REAZIONE AVVERSA, CONSULTARE IMMEDIATAMENTE IL PROPRIO OPERATORE SANITARIO.
AVVERTENZA - LA CERNIERA DI QUESTO TUTORE È CONCEPITA PER LIMITARE E/O REGOLARE IL RAGGIO DI MOVIMENTO; NON È PREVISTA PER LA STABILIZZAZIONE DEL GINOCCHIO QUANDO SI SPOSTA IL PESO SU QUELLA GAMBA, NÉ PER SOSTITUIRE UN AUSILIO DI DEAMBULAZIONE. SEGUIRE I CONSIGLI DEL MEDICO IN RELAZIONE ALL'APPOGGIO DEL PESO E USARE SEMPRE UN APPROPRIATO DISPOSITIVO DI AUSILIO ALLA DEAMBULAZIONE, COME DELLE STAMPELLE O UN DEAMBULATORE.
ATTENZIONE - VENDITA CONSENTITA SOLO AGLI OPERATORI SANITARI ABILITATI O DIETRO AUTORIZZAZIONE DEGLI STESSI.
ATTENZIONE - ESCLUSIVAMENTE PER UN SINGOLO PAZIENTE.

A V E R T I S S E M E N T S

AVERTISSEMENT : VEUILLEZ LIRE ATTENTIVEMENT LE MODE D'EMPLOI ET LES AVERTISSEMENTS AVANT USAGE.
AVERTISSEMENT : NE RETIREZ PAS L'ORTHESE T SCOPE, SAUF SUR RECOMMANDATION SPECIFIQUE DE VOTRE PRATICIEN. NE MODIFIEZ PAS LE REGLAGE DE LA MOBILITE ARTICULAIRE SANS LA SUPERVISION D'UN PRATICIEN.
AVERTISSEMENT : CE DISPOSITIF N'EST PAS DESTINE A PREVENIR OU A REDUIRE TOUTES LES LESIONS. UNE REEDUCATION APPROPRIEE ET UN CHANGEMENT D'ACTIVITE FONT EGALEMENT PARTIE DES ELEMENTS ESSENTIELS A UN PROGRAMME DE TRAITEMENT REUSSI. ADRESSEZ-VOUS A VOTRE PRATICIEN POUR TOUTE QUESTION AU SUJET DU NIVEAU D'ACTIVITE APPROPRIE ET SUR L'EMPLOI SANS DANGER DE CE DISPOSITIF.
AVERTISSEMENT : EN CAS D'AUGMENTATION DE LA DOULEUR, D'ENFLURE, D'IRRITATION DE LA PEAU OU D'AUTRES REACTIONS INDESIRABLES LORS DE L'USAGE DE CE PRODUIT, CONSULTEZ IMMEDIATEMENT VOTRE PRATICIEN.
AVERTISSEMENT : L'ARTICULATION DE CET ORTHESE EST CONÇUE POUR LIMITER ET/OU CONTROLER LA MOBILITE ARTICULAIRE. ELLE N'EST PAS DESTINEE A STABILISER VOTRE GENOU LORSQUE VOUS APPUYEZ DESSUS ET ELLE NE REMPLACE PAS UN DISPOSITIF D'AIDE A LA MARCHE. SUIVEZ LES RECOMMANDATIONS DE VOTRE MEDECIN EN CE QUI CONCERNE LA MISE EN APPUI ET UTILISEZ TOUJOURS UN DISPOSITIF D'ASSISTANCE CORRECT TEL DES BEQUILLES OU UN DEAMBULATEUR.
ATTENTION : LA LOI FEDERALE AMERICAINE N'AUTORISE LA VENTE DE CE DISPOSITIF QUE PAR UN PRATICIEN AGREE OU SUR SON ORDONNANCE.
ATTENTION : USAGE RESERVE A UN SEUL PATIENT.

A D V E R T E N C I A S

ADVERTENCIA: LEA DETENIDAMENTE LAS INSTRUCCIONES DE USO/CUIDADO Y LAS ADVERTENCIAS ANTES DE USAR ESTE PRODUCTO.
ADVERTENCIA: NO SE QUITE LA RODILLERA T SCOPE A MENOS QUE LO INDIQUE EL PROFESIONAL MÉDICO QUE LE PROPORCIONA TRATAMIENTO. NO CAMBIE LAS POSICIONES DE LA BISAGRA DE CONTROL DEL RANGO DE MOVIMIENTO SIN LA SUPERVISIÓN DE UN PROFESIONAL MÉDICO.
ADVERTENCIA: ESTE APARATO NO PREVIENE NI REDUCE TODAS LAS LESIONES. LA ADECUADA REHABILITACIÓN Y MODIFICACIÓN DE LA ACTIVIDAD SON TAMBIÉN PARTE ESENCIAL DE UN PROGRAMA SEGURO DE TRATAMIENTO. CONSULTE CON EL PROFESIONAL MÉDICO QUE LE PROPORCIONA TRATAMIENTO ACERCA DEL NIVEL SEGURO Y APROPIADO DE ACTIVIDAD MIENTRAS LLEVA ESTE DISPOSITIVO.
ADVERTENCIA: SI EXPERIMENTA AUMENTO DEL DOLOR, HINCHAZÓN, IRRITACIÓN DE LA PIEL O CUALQUIER REACCIÓN ADVERSA AL USAR ESTE PRODUCTO, CONSULTE INMEDIATAMENTE A SU PROFESIONAL MÉDICO.
ADVERTENCIA: LA BISAGRA EN ESTA RODILLERA HA SIDO DISEÑADA PARA LIMITAR Y/O CONTROLAR EL RANGO DE MOVIMIENTO. NO HA SIDO DISEÑADA PARA ESTABILIZAR LA RODILLA CUANDO ESTÉ APOYANDO EL PESO EN ELLA, NI PARA SUSTITUIR A UN MEDIO DE AYUDA PARA CAMINAR. SIGA LOS CONSEJOS DE SU MÉDICO SOBRE EL APOYO DEL PESO Y UTILICE SIEMPRE UN MEDIO DE AYUDA ADECUADO, COMO MULETAS O UN ANDADOR.
PRECAUCIÓN: LA LEY FEDERAL RESTRINGE LA VENTA DE ESTE APARATO A LOS CASOS DE VENTA POR O BAJO LA ORDEN DE UN PROFESIONAL MÉDICO LICENCIADO.
PRECAUCIÓN: PARA USO ÚNICO EN UN PACIENTE SOLAMENTE.

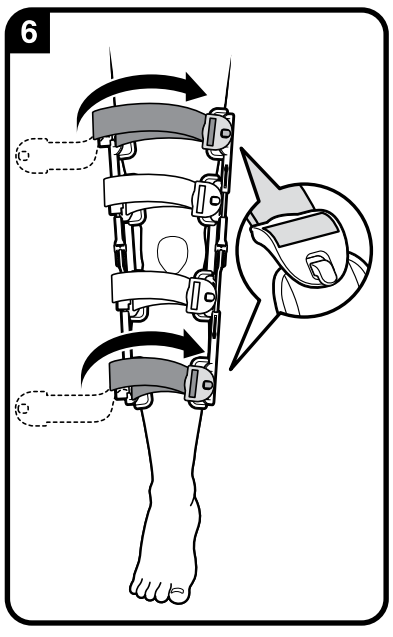

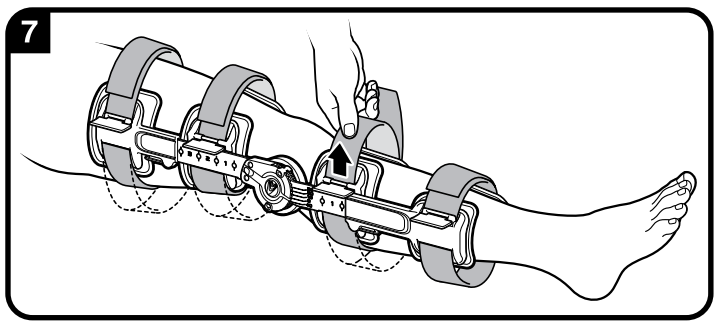

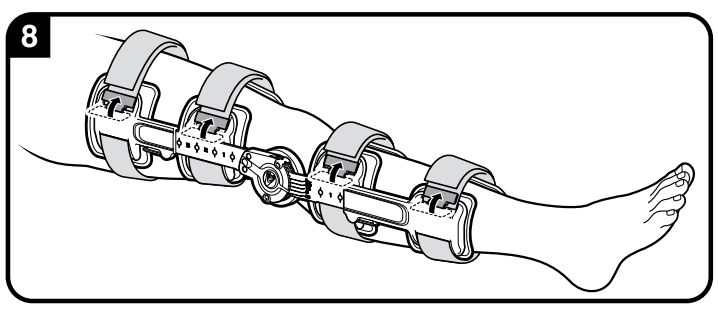

INITIAL APPLICATION BY A MEDICAL PROFESSIONAL ONLY!

1. Unlock strap clips (A), Unclip buckles (B).
2. Spread hinge bars apart, lay brace out flat, position device with knee centered between hinges. Orient the brace so the hinges are facing in the direction indicated and the small calf pads are towards the feet.
   Example: right leg.
3. Loosen friction clips on the telescoping bars. For proper fit, slide upper and lower telescoping hinge bars to accommodate leg length. Lock friction clips. Hinge bar length indicators assist in verifying the consistent length selection on thigh and calf.
4. Position hinge bars laterally and medially to the leg, center hinge at the knee joint.
5. Loosely fasten the 2 straps closest to the knee.
6. Loosely fasten the remaining 2 straps.
7. Pull straps tight to remove slack behind the leg. Be careful to maintain the lateral and medial positions of the hinge bars.
8. Lock strap lock clips.
9. Pull straps tight through the buckles. Be careful to maintain the lateral and medial positions of the hinge bars.
10. Secure strap ends, use hook and loop Y-tabs at strap ends to affix straps. It may be necessary to shorten straps by folding them over before attaching Y-tabs.

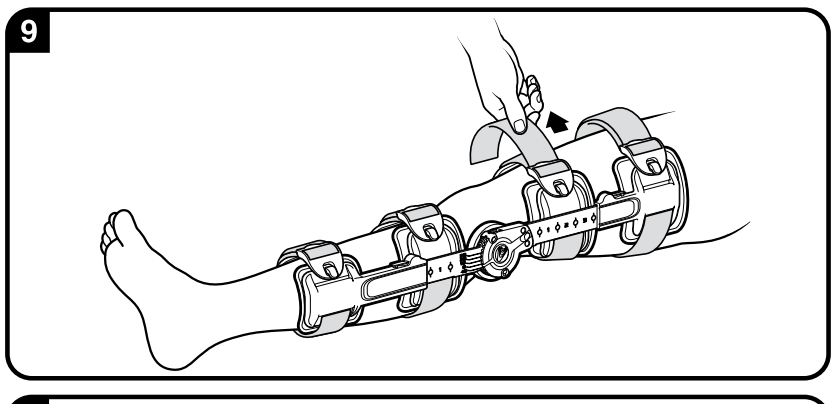

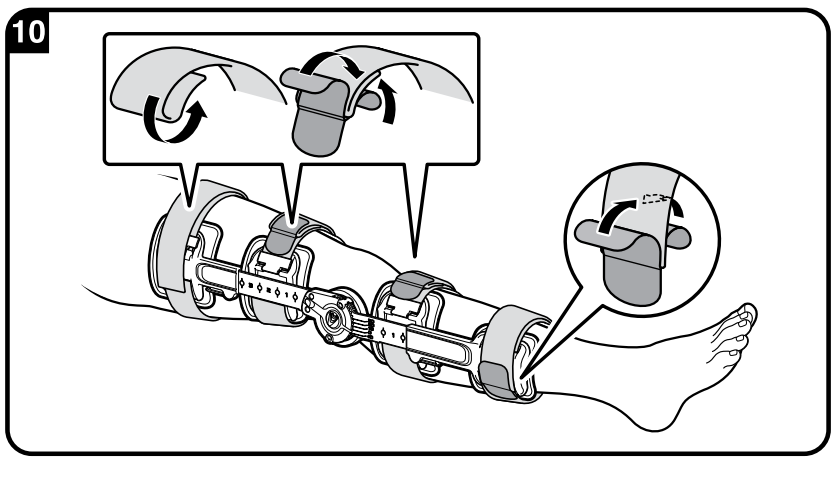

ROM (RANGE-OF-MOTION) HINGE ADJUSTMENTS:

11. Extension limit settings may be selected between -10° (Hyperextension) and 70° by pulling the tab out and sliding it to desired position.
12. Flexion limit settings may be selected between -10° and 120° (represented as last tick mark on scale).
13. The hinge may be locked by sliding the quick lock button into the locked position at any one of 5 positions: -10° (hyperextension), 0° (Neutral), 10°, 20°, 30° of flexion.

BRIDGETECH INCISION PAD APPLICATION AND ADJUSTMENTS:

14. The BridgeTech Incision Pad can be added to the T Scope Premier to alleviate pressure around the incision site. You will need to replace one of the existing pads when using the BridgeTech Incision Pad.
15. To replace one of the existing pads, remove the existing pad from the cuff. Make sure the incision pad will be placed on the appropriate cuff, so it is on same side as the incision. The piece of double sided hook may be attached to the back of this pad or could remain on the strap. If it is on the pad, remove and affix to the middle of the strap that is attached to the cuff.
16. Apply the BridgeTech Incision Pad to the cuff with the flat side down, making sure the tear-away sections point away from the medial (middle) side of the brace. The tear-away sections will be in the proper location once the brace is applied.
17. To bridge an incision point, remove individual tear-away sections as needed.
18. To provide additional support and pressure relief, affix the tear-away sections of the BridgeTech Incision Pad to the strap that is below the knee on either side of the tibia.

USE AND CARE OF YOUR T SCOPE BRACE:

After initial application, the T Scope may be removed and reapplied by unclipping the buckles only.

Hand wash the foam pads and straps with mild soap and air dry. Do not place pads or straps into a mechanical dryer.

Extra foam pads are available from Customer Care: (800) 321-0607. The BridgeTech Incision Pad is available as an accessory for an additional charge.

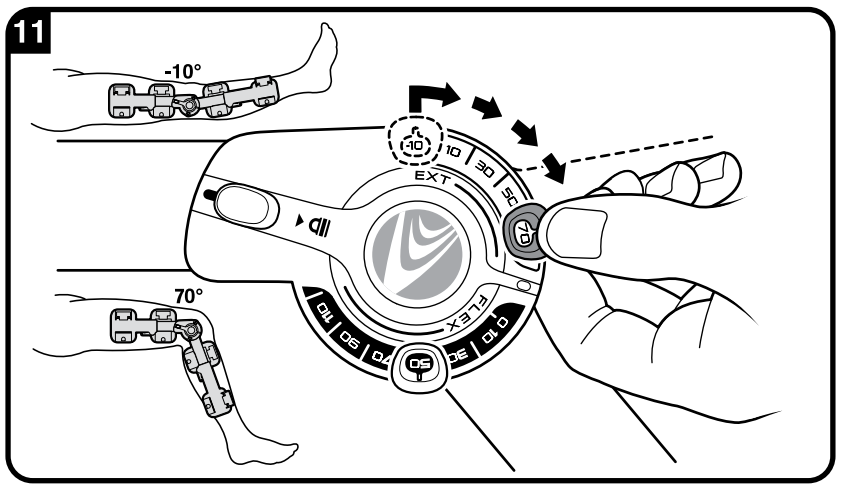

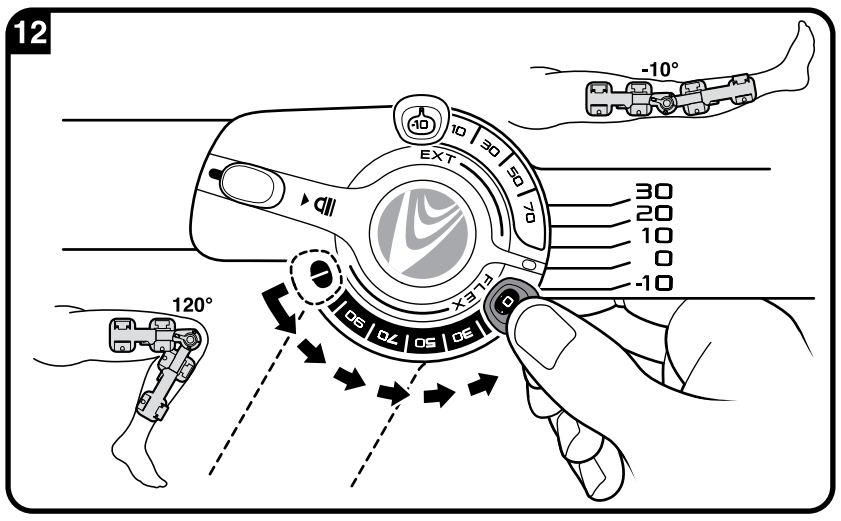

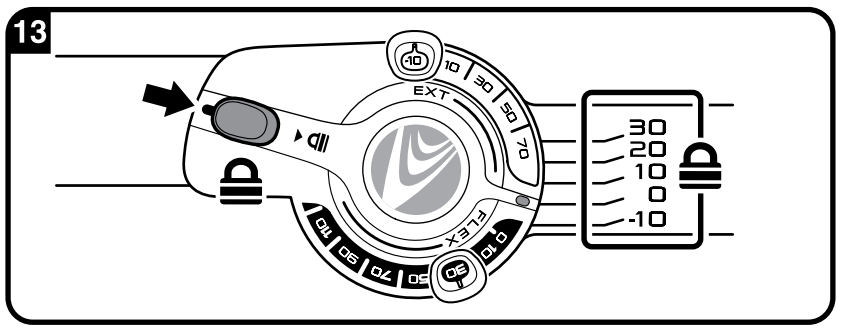

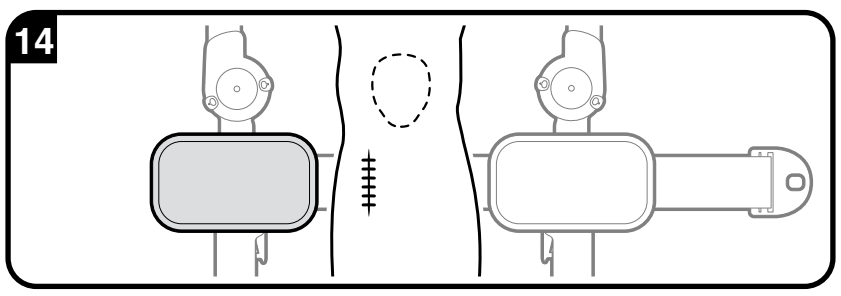

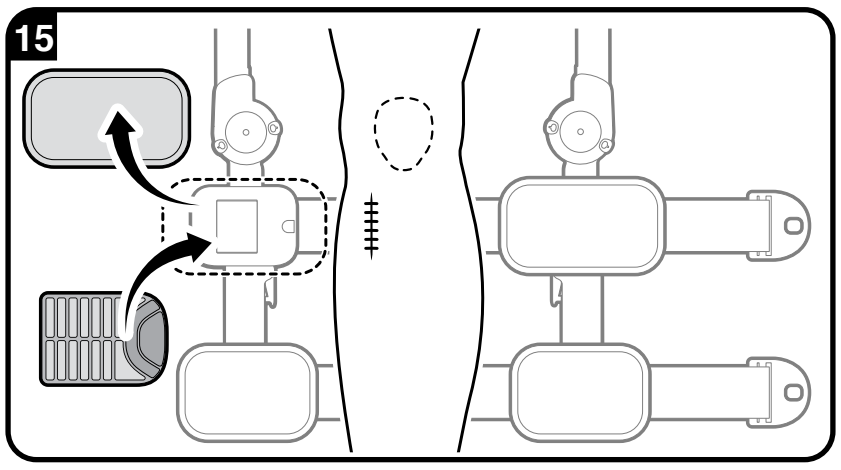

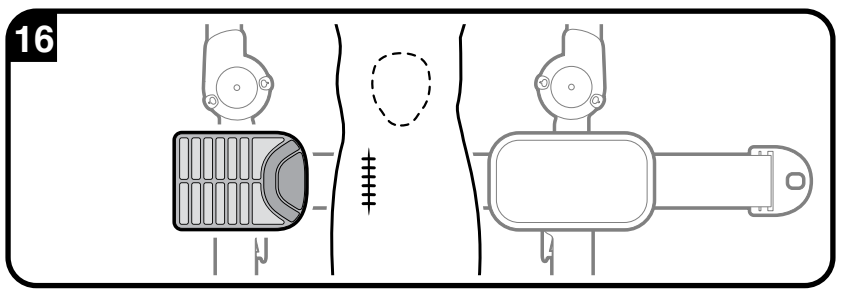

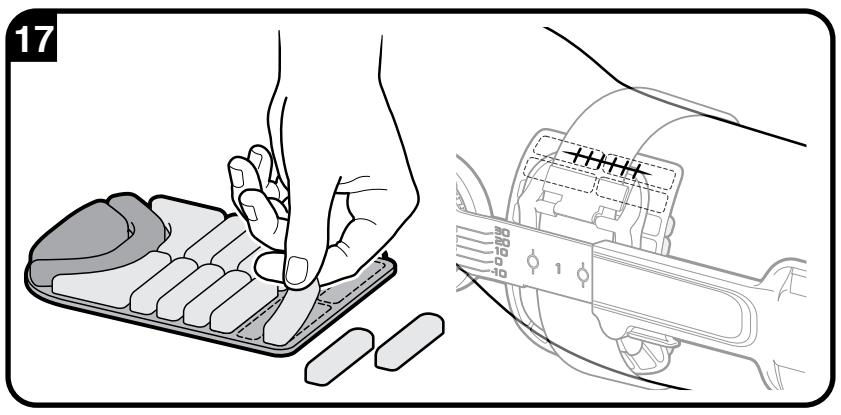

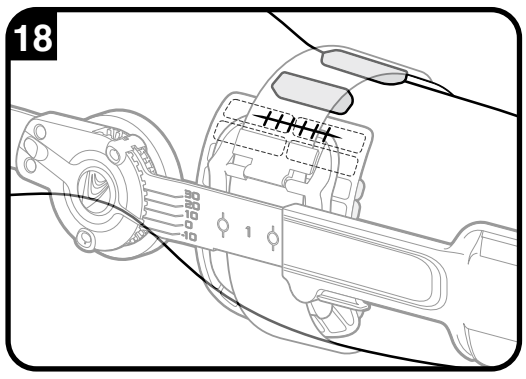

DAS ERSTMALIGE ANLEGEN DARF NUR VON EINEM ARZT ODER VON QUALIFIZIERTEM PFLEGEPERSONAL AUSGEFÜHRT WERDEN!

1 Verschlussclips der Gurte (A) lösen und Schnallen (B) aushaken.

2 Scharnierstangen auseinanderziehen, Schiene auseinandergebreitet hinlegen und Vorrichtung so positionieren, dass das Knie zwischen Scharnieren zentriert ist. Schiene so ausrichten, dass die Scharniere in die angezeigte Richtung und die kleinen Wadenpolster in Fußrichtung zeigen.
Beispiel: rechtes Bein.

3 Reibschlussclips an den Teleskopstangen lockern. Obere und untere Teleskop-Scharnierstangen je nach Beinlänge verschieben, damit sie ordnungsgemäß sitzen. Reibschlussclips verriegeln. Die richtige Länge an Schenkel und Wade wird anhand der Markierungen an den Scharnierstangen überprüft.

4 Scharnierstangen mit dem mittleren Scharnier am Kniegelenk lateral und medial zum Bein positionieren.

5 Beide knienahen Gurte locker schließen.

6 Restliche 2 Gurte locker schließen.

7 Gurte so fest anziehen, dass sich kein Spielraum hinter dem Bein befindet. Sicherstellen, dass sich die Scharnierstangen nicht seitlich oder mittig verschieben.

8 Clips an den Gurten schließen.

9 Gurte fest durch die Schnallen ziehen. Sicherstellen, dass sich die Scharnierstangen nicht seitlich oder mittig verschieben.

10 Gurtenden sichern und Gurte mit den Klettverschluss-Laschen an den Gurtenden befestigen. Die Gurte können vor Befestigung der Laschen ggf. umgefaltet und gekürzt werden.

NNM-SCHARNIEREINSTELLUNGEN (NEUTRAL-NULL-METHODE):

11 Die Streckgrenze kann zwischen -10 Grad (Überstreckung) und 70 Grad eingestellt werden, indem die Lasche herausgezogen und in die gewünschte Position gebracht wird.

12 Die Beugegrenze kann zwischen -10 und 120 Grad (letzte Markierung auf der Skala) eingestellt werden.

13 Schnellverschlussknopf in einer der 5 Positionen arretieren, um das Scharnier zu sperren: -10 (Überstreckung), 0 Grad (neutral), 10 Grad, 20 Grad, 30 Grad Beugung.

ANLEGEN UND EINSTELLEN DES BRIDGETECH-INZISIONSPOLSTERS:

14 Das BridgeTech-Inzisionspolster kann zur T-Scope-Premier-Schiene hinzugefügt werden, um den Druck um die Inzisionsstelle herum zu reduzieren. Bei Verwendung des BridgeTech-Inzisionspolsters muss eines der vorhandenen Polster ausgewechselt werden.

15 Dazu ein vorhandenes Polster aus der Manschette entfernen. Sicherstellen, dass das Inzisionspolster an der richtigen Manschette positioniert wird, damit es sich auf derselben Seite wie die Inzision befindet. Der doppelseitige Klettverschluss kann an der Rückseite dieses Polsters befestigt werden oder am Gurt verbleiben. Befindet er sich am Polster, wird er entfernt und mittig auf dem Gurt an der Manschette befestigt.

16 BridgeTech-Inzisionspolster mit der flachen Seite nach unten auf der Manschette anbringen. Sicherstellen, dass die perforierten Bereiche von der Mitte der Schiene weg zeigen. Die perforierten Bereiche werden sich an der richtigen Stelle befinden, wenn die Schiene angelegt ist.

17 Zur Überbrückung einer Inzisionsstelle werden die einzelnen perforierten Bereiche nach Bedarf entfernt.

18 Für zusätzliche Stütze und Druckentlastung können die perforierten Bereiche des BridgeTech-Inzisionspolsters an dem Gurt befestigt werden, der sich unterhalb des Knies links oder rechts des Schienbeins befindet.

GEBRAUCH UND PFLEGE DER T-SCOPE-SCHIENE:

Nach dem ersten Anlegen brauchen nur die Schnallen geöffnet zu werden, um die T-Scope-Schiene zu entfernen und wieder anzulegen.

Schaumstoffpolster und Gurte mit einem milden Waschmittel von Hand reinigen und an der Luft trocknen lassen. Die Polster und Gurte nicht in einem Wäschetrockner trocknen.

Zusätzliche Schaumstoffpolster sind beim Kundendienst erhältlich: (800) 321-0607. Das BridgeTech-Inzisionspolster ist als Zubehör gegen Aufpreis erhältlich.

L'APPLICAZIONE INIZIALE DEVE ESSERE ESEGUITA ESCLUSIVAMENTE DA UN OPERATORE SANITARIO!

1 Aprire i fermagli dei cinturini (A) e sganciare le fibbie (B).

2 Allargare le barre delle cerniere, distendere il tutore in piano e posizionare il dispositivo con il ginocchio centrato fra le cerniere. Orientare il tutore in modo che le cerniere siano rivolte nella direzione indicata e che i piccoli cuscinetti del polpaccio siano rivolti verso i piedi.
Esempio: gamba destra.

3 Allentare i fermagli antislittamento sulle barre telescopiche. Per un adattamento ottimale, far scivolare le barre telescopiche superiore e inferiore delle cerniere per adattarle alla lunghezza della gamba. Bloccare i fermagli antislittamento. Gli indicatori della lunghezza delle barre delle cerniere aiutano a verificare la scelta di una lunghezza omogenea su coscia e polpaccio.

4 Posizionare le barre delle cerniere lateralmente e medialmente rispetto alla gamba, centrando le cerniere a livello dell'articolazione del ginocchio.

5 Fissare senza stringerli i 2 cinturini più vicini al ginocchio.

6 Chiudere senza stringerli i restanti 2 cinturini.

7 Tendere bene i cinturini per eliminare il lasco dietro la gamba. Fare attenzione a mantenere le posizioni laterale e mediale delle barre delle cerniere.

8 Chiudere i fermagli di bloccaggio dei cinturini.

9 Stringere bene i cinturini attraverso le fibbie. Fare attenzione a mantenere le posizioni laterale e mediale delle barre delle cerniere.

10 Fissare le estremità dei cinturini usando le linguette a Y a uncini e asole situate ai capi dei cinturini stessi. Potrebbe essere necessario accorciare i cinturini ripiegandoli su sé stessi prima di fissare le linguette a Y.

REGOLAZIONI DEL RAGGIO DI MOVIMENTO DELLE CERNIERE

11 Le impostazioni del limite di estensione possono essere selezionate fra -10° (iperestensione) e 70°, tirando in fuori la linguetta e facendola scorrere sulla posizione desiderata.

12 Le impostazioni del limite di flessione possono essere selezionate fra -10° e 120° (l'ultimo segno sulla scala rappresenta i 120°).

13 Si può fermare la cerniera facendo scorrere il pulsante di bloccaggio rapido in una qualsiasi delle 5 posizioni di arresto disponibili: -10° (iperestensione), 0° (posizione neutra), 10°, 20°, 30° di flessione.

APPLICAZIONE E REGOLAZIONI DEL CUSCINETTO PER INCISIONI BRIDGETECH

14 Al tutore T Scope Premier è possibile aggiungere il cuscinetto per incisioni BridgeTech per alleviare la pressione attorno al sito dell'incisione. Quando si usa il cuscinetto per incisioni BridgeTech, è necessario sostituire uno dei cuscinetti esistenti.

15 Per sostituire uno dei cuscinetti esistenti, rimuoverlo dal manicotto. Assicurarsi che il cuscinetto per incisioni sia sistemato sul manicotto appropriato, in modo che si trovi sullo stesso lato dell'incisione. Il pezzo di materiale a doppia faccia con uncini potrebbe rimanere fissato alla parte posteriore di questo cuscinetto, oppure potrebbe restare sul cinturino. Se si trova sul cuscinetto, rimuoverlo e fissarlo sulla parte mediana del cinturino collegato al manicotto.

16 Applicare il cuscinetto per incisioni BridgeTech sul manicotto, con il lato piatto rivolto verso il basso, assicurandosi che le sezioni staccabili siano rivolte in direzione opposta rispetto al lato mediale (centrale) del tutore. Le sezioni staccabili si troveranno nell'ubicazione corretta una volta applicato il tutore.

17 Per formare un ponte protettivo sopra un punto di incisione, rimuovere secondo la necessità le singole sezioni staccabili.

18 Per fornire ulteriore supporto e sollievo dalla pressione, collocare le sezioni staccabili del cuscinetto per incisioni BridgeTech sul cinturino che si trova al di sotto del ginocchio, su entrambi i lati della tibia.

USO E MANUTENZIONE DEL TUTORE T SCOPE

Dopo l'applicazione iniziale, è possibile rimuovere il tutore T Scope e riapplicarlo semplicemente sganciando le fibbie.

Lavare a mano i cuscinetti in espanso e i cinturini con un detersivo neutro, e farli asciugare all'aria. Non mettere i cuscinetti né i cinturini in asciugatrice.

I cuscinetti in espanso di ricambio sono disponibili presso il reparto di Assistenza alla clientela: 800 321 0607. Il cuscinetto per incisioni BridgeTech è disponibile come accessorio acquistabile separatamente.

LA MISE EN PLACE INITIALE NE PEUT ETRE EFFECTUEE QUE PAR UN PRATICIEN !

1 Déverrouillez les brides de la sangle (A), puis ouvrez les boucles (B).

2 Ecartez les barres des articulations, étendez l'orthèse à plat, puis placez le dispositif avec le genou centré entre les articulations. Orientez l'orthèse de manière à ce que les articulations soient dirigées dans la direction indiquée et que les petits coussinets de mollet soient tournés vers le pied.
Exemple : jambe droite.

3 Desserrez les brides à friction sur les barres coulissantes. Pour une bonne mise en place, faites glisser les barres d'articulation coulissantes supérieure et inférieure de manière à les ajuster à la longueur de la jambe. Verrouillez les brides à friction. Les indicateurs de longueur de barres d'articulation permettent de s'assurer que la sélection de longueur est constante sur la cuisse et le mollet.

4 Placez les barres d'articulation en position latérale et médiale par rapport à la jambe, puis centrez l'articulation au niveau de l'articulation du genou.

5 Attachez sans les serrer les 2 sangles les plus proches du genou.

6 Attachez sans serrer les 2 sangles restantes.

7 Tirez à fond sur les sangles de manière à supprimer le jeu derrière la jambe. Veillez à maintenir les positions latérales et médiales des barres d'articulation.

8 Fermez les brides de verrouillage des sangles.

9 Tirez les sangles à fond à travers les boucles. Veillez à maintenir les positions latérales et médiales des barres d'articulation.

10 Attachez les extrémités des sangles et utilisez les pattes en « Y » à fermeture auto-adhésive pour fixer les sangles. Il sera peut-être nécessaire de raccourcir les sangles en les repliant avant d'attacher les pattes en « Y ».

REGLAGE DES ARTICULATIONS POUR LA MOBILITE ARTICULAIRE :

11 Les réglages de limites d'extension peuvent être effectués entre -10° (hyperextension) et 70°, en tirant sur la patte pour la faire sortir et en la faisant glisser à la position souhaitée.

12 Les réglages de limites de flexion peuvent être effectués entre -10° et 120° (représenté par la dernière petite ligne droite sur l'échelle).

13 L'articulation peut être verrouillée en faisant glisser le bouton à verrouillage rapide en position verrouillée sur l'une des 5 positions suivantes : -10° (hyperextension), 0° (neutre), 10°, 20° et 30° de flexion.

MISE EN PLACE ET REGLAGES DU COUSSINET D'INCISION BRIDGETECH :

14 Le coussinet d'incision BridgeTech peut être ajouté à l'orthèse T Scope Premier pour relâcher la pression autour du site d'incision. Lorsque vous utilisez le coussinet d'incision BridgeTech, vous devrez remplacer l'un des coussinets présents.

15 Pour remplacer l'un des coussinets présents, retirez le coussinet en question de la bande. Assurez-vous que le coussinet d'incision est placé sur la bande appropriée, de manière à ce qu'il se trouve sur le même côté que l'incision. Le morceau de fermeture crochets recto-verso peut être attaché sur l'arrière de ce coussinet ou il peut rester sur la sangle. S'il se trouve sur le coussinet, retirez-le et fixez-le sur le milieu de la sangle qui est attachée sur la bande.

16 Appliquez le coussinet d'incision BridgeTech sur la bande avec le côté plat tourné vers le bas, en vous assurant que les sections détachables ne sont pas dirigées vers le côté médial (milieu) de l'orthèse. Les sections détachables seront au bon emplacement une fois l'orthèse mise en place.

17 Pour éviter de toucher un point d'incision, retirez les sections détachables individuelles selon les besoins.

18 Pour fournir un support supplémentaire et relâcher la pression, fixez les sections détachables du coussinet d'incision BridgeTech sur la sangle qui se trouve sous le genou des deux côtés du tibia.

UTILISATION ET ENTRETIEN DE VOTRE ORTHESE T SCOPE :

Une fois réglée et mise en place, l'orthèse T Scope s'enlève et se remet en défaisant tout simplement les boucles.

Lavez les coussinets en mousse et les sangles à la main avec un savon doux, puis laissez-les sécher à l'air. Ne mettez pas les coussinets ou les sangles dans un sèche-linge mécanique.

Vous pouvez commander des coussinets en mousse supplémentaires en appelant le service à la clientèle au : (800) 321-0607. Le coussinet d'incision BridgeTech est un accessoire qui s'achète séparément.

¡SOLAMENTE UN PROFESIONAL MÉDICO DEBE EFECTUAR LA APLICACIÓN INICIAL!

1 Abra los clips de fijación de la tira (A), desenganche las hebillas (B).

2 Separe las barras de bisagra, extienda la rodillera, coloque el dispositivo con la rodilla centrada entre las bisagras. Oriente la rodillera de manera que las bisagras queden mirando en la dirección indicada y los acolchados de la pantorrilla, más pequeños, hacia los pies.
Ejemplo: pierna derecha.

3 Afloje los clips de fricción de las barras telescópicas. Para lograr un ajuste correcto, deslice las barras telescópicas de bisagra superiores e inferiores a fin de acomodar la pierna en toda su longitud. Cierre los clips de fricción. Los indicadores de longitud de las barras de bisagra permiten verificar la concordancia de las longitudes seleccionadas en el muslo y en la pantorrilla.

4 Coloque las barras de bisagra lateral y medialmente con respecto a la pierna, y centre la bisagra en la articulación de la rodilla.

5 Enganche, sin apretar, las 2 tiras más próximas a la rodilla.

6 Enganche, sin apretar, las 2 tiras restantes.

7 Tire de las tiras para apretarlas hasta que no quede ninguna holgura detrás de la pierna. Tenga cuidado de conservar las posiciones lateral y medial de las barras de bisagra.

8 Cierre los clips de fijación de las tiras.

9 Tire de las tiras para apretarlas a través de las hebillas. Tenga cuidado de conservar las posiciones lateral y medial de las barras de bisagra.

10 Sujete los extremos de las tiras, utilice las lengüetas en Y de gancho y lazo en los extremos de las tiras para fijarlas. Puede que tenga que doblar las tiras para acortarlas, antes de introducirlas en las lengüetas en Y.

AJUSTES DE LA BISAGRA DE CONTROL DEL RANGO DE MOVIMIENTO:

11 Los valores de los límites de extensión pueden seleccionarse entre -10° (hiperextensión) y 70° tirando de la lengüeta hacia fuera y deslizándola a la posición deseada.

12 Los valores de los límites de flexión pueden seleccionarse entre -10° y 120° (representada como la última marca indicadora en la escala).

13 La bisagra puede fijarse en una posición deslizando el botón de fijación rápida a la posición de bloqueo en cualquiera de las 5 posiciones: -10° (hiperextensión), 0° (Neutra), 10°, 20°, 30° de flexión.

APLICACIÓN Y AJUSTES DEL ACOLCHADO DE INCISIÓN BRIDGETECH:

14 El acolchado de incisión BridgeTech se puede agregar a la rodillera T Scope Premier para aliviar la presión alrededor del área de la incisión. Deberá remplazar uno de los acolchados existentes cuando use el acolchado de incisión BridgeTech.

15 Para remplazar uno de los acolchados existentes, retire el acolchado existente en la pieza rígida. Asegúrese de que el acolchado de incisión se coloque en la pieza rígida adecuada de manera que se encuentre en el mismo lado de la incisión. La pieza de doble cara de gancho se puede colocar en la parte trasera de este acolchado o permanecer en la tira. Si se coloca en el acolchado, retírela y fíjela en el medio de la tira que se sujeta a la pieza rígida.

16 Coloque el acolchado de incisión BridgeTech en la pieza rígida con el lado aplanado hacia abajo. Asegúrese de que las secciones que se desprenden apunten hacia afuera del lado medial (el centro) de la rodillera. Las secciones que se desprenden quedarán en la posición correcta cuando se aplique la rodillera.

17 Para crear un efecto de puente en el punto de incisión, retire individualmente las secciones que se desprenden según sea necesario.

18 Para ofrecer más apoyo y alivio de la presión, fije las secciones que se desprenden del acolchado de incisión BridgeTech a la tira debajo de la rodilla en cualquier lado de la tibia.

USO Y CUIDADO DE LA RODILLERA T SCOPE:

Después de la aplicación inicial, la rodillera T Scope puede quitarse y volverse a colocar con sólo desenganchar las hebillas.

Lave a mano los acolchados de espuma y las tiras con jabón suave, y seque al aire. No seque los acolchados ni las tiras en una secadora.

Puede obtener acolchados de espuma adicionales del Departamento de Atención al Cliente: (800) 321-0607. El acolchado de incisión BridgeTech se ofrece como un accesorio por un cargo adicional.